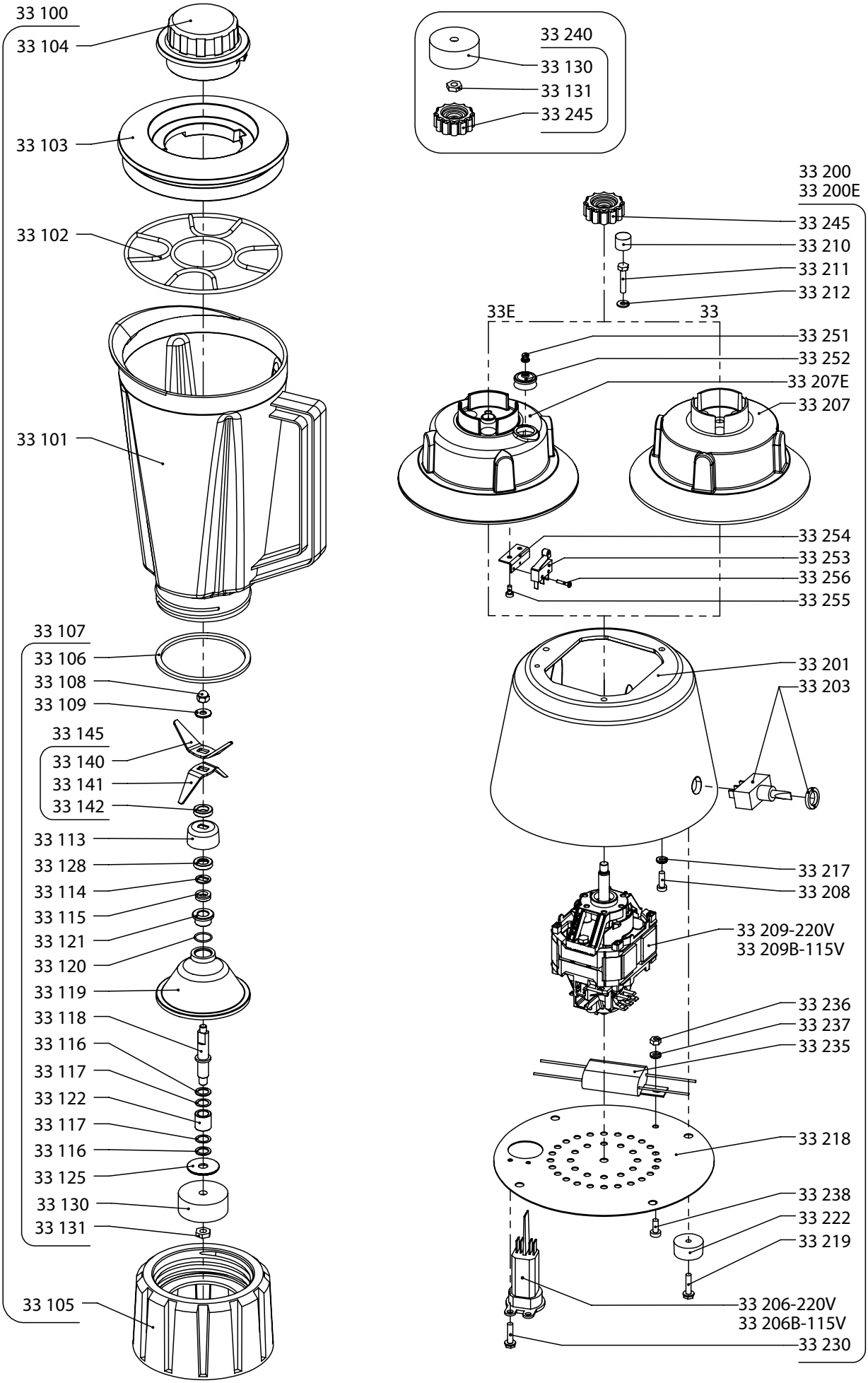SANTOS #33 - Mixer (Blender)